bogballe

L2(W) plus
Spare Parts List

0404-97-05-14 V06

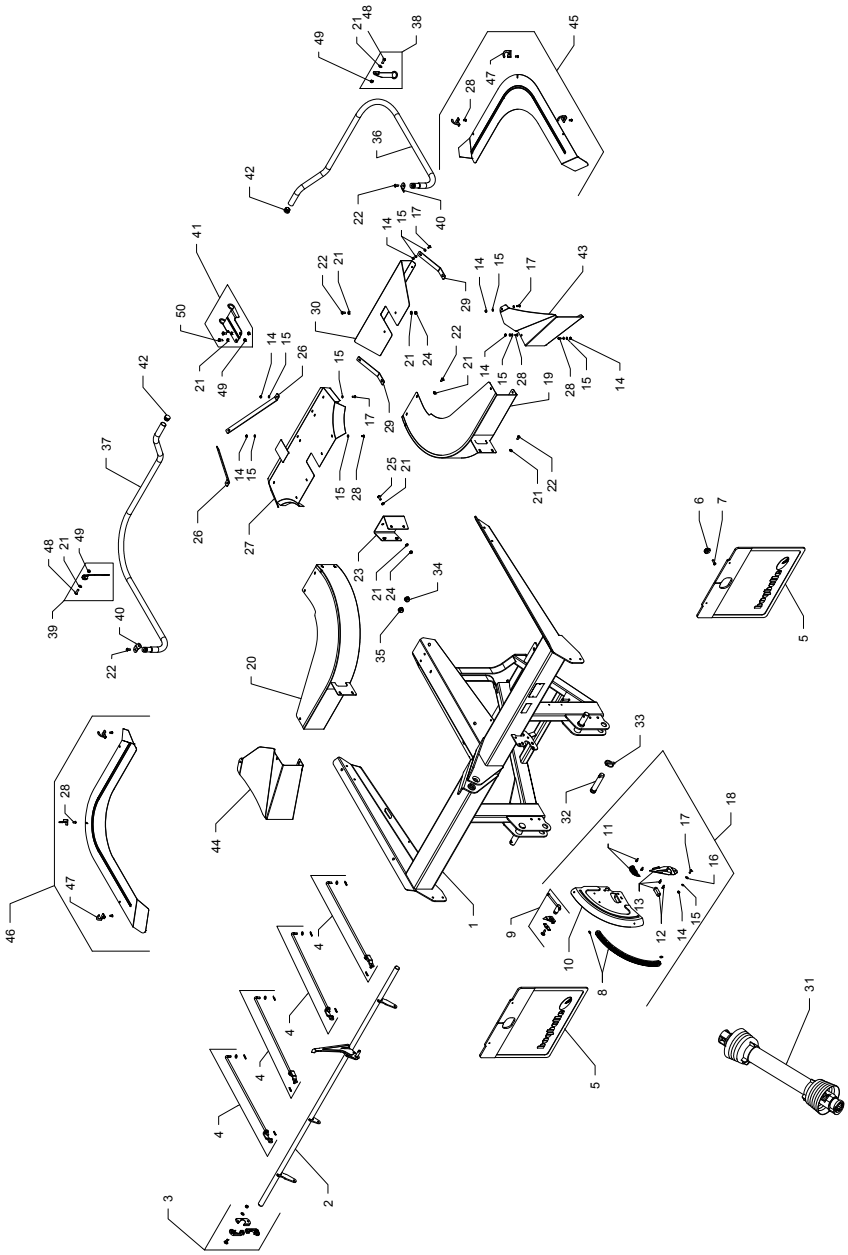
1
2
3
4
5
6
7
8
9
10
11
12
13
14
15
16
17
18
19
20
21
22
23
24
25
26
27
28
29
30
31
32
33
34
35
36
37
38
39
40
41
42
43
44
45
46
47
48
49
50

L2(W)
Spare parts list

Pos. No.	Order no.	Notes.	Pos. No.	Order no.	Notes.
1	6820-01	L2	46	6231-24	Right
1	6820-20	L2W	47	6231-30	
2	6840-01		48	9913-50	M8x20
3	6340-05		49	9969-32	M8 Loc
4	6841-05		50	9962-04	M8x20
5	6875-01				
6	9990-43				
7	9961-14	M6x25			
8	6840-25				
9	6381-13				
10	6840-21				
11	6381-18				
12	6381-17				
13	6381-16				
14	9969-16	M6 Loc			
15	9930-02	D6/12			
16	9930-53	D8/15/3			
17	9961-21	M6x16			
18	6840-20				
19	6871-01	Left			
20	6871-02	Right			
21	9930-32	D8/16			
22	9962-26	M8x16			
23	6871-10				
24	9969-31	M8			
25	9913-50	M8x20			
26	6874-03				
27	4474-02				
28	9961-20	M6x12			
29	4473-02				
30	4473-01				
31	9985-27	Lgt. 710 mm			
32	6320-04				
33	9938-74				
34	9990-08				
35	6350-12				
36	6830-05	Left			
37	6830-06	Right			
38	6830-15	Left			
39	6830-16	Right			
40	6830-12				
41	6830-18				
42	9990-12				
43	6980-72	L2W			
44	6980-73	L2W			
45	6231-23	Left			

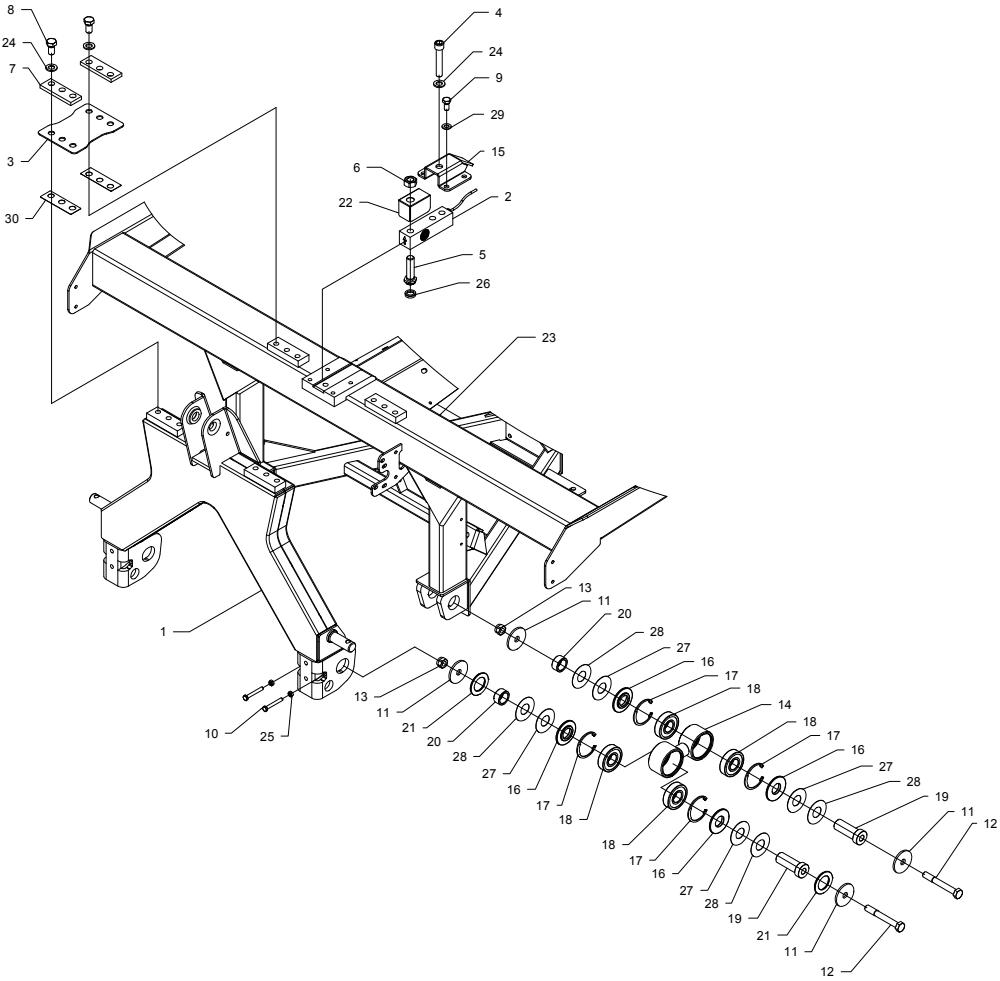
8
24
7
3
30
4
24
9
29
15
6
22
2
5
26
23
1
13
11
20
28
27
16
17
18
14
18
17
16
27
28
19
11
12
13
11
21
20
28
27
16
17
18
18
17
16
27
28
19
21
11
12
10
25

L2W
Spare parts list

Pos. No.	Order no.	Notes.	Pos. No.	Order no.	Notes.
1	6822-30				
2	9942-33				
3	6220-25				
4	9913-41				
5	6320-29				
6	9968-97	M20			
7	6220-26				
8	9964-71	M16x30			
9	9964-43	M12x25			
10	9962-22	M8x60			
11	6220-34				
12	9964-79	M16x120			
13	9969-84	M16			
14	6220-30				
15	6822-45				
16	6220-33				
17	9937-45				
18	9950-05				
19	6220-35				
20	6220-36				
21	6820-30				
22	6822-46				
23	6820-20				
24	9930-20	D17/30			
25	9969-31	M8			
26	9936-27				
27	6220-37				
28	6220-38				
29	9930-35	D13/24			
30	6220-27				

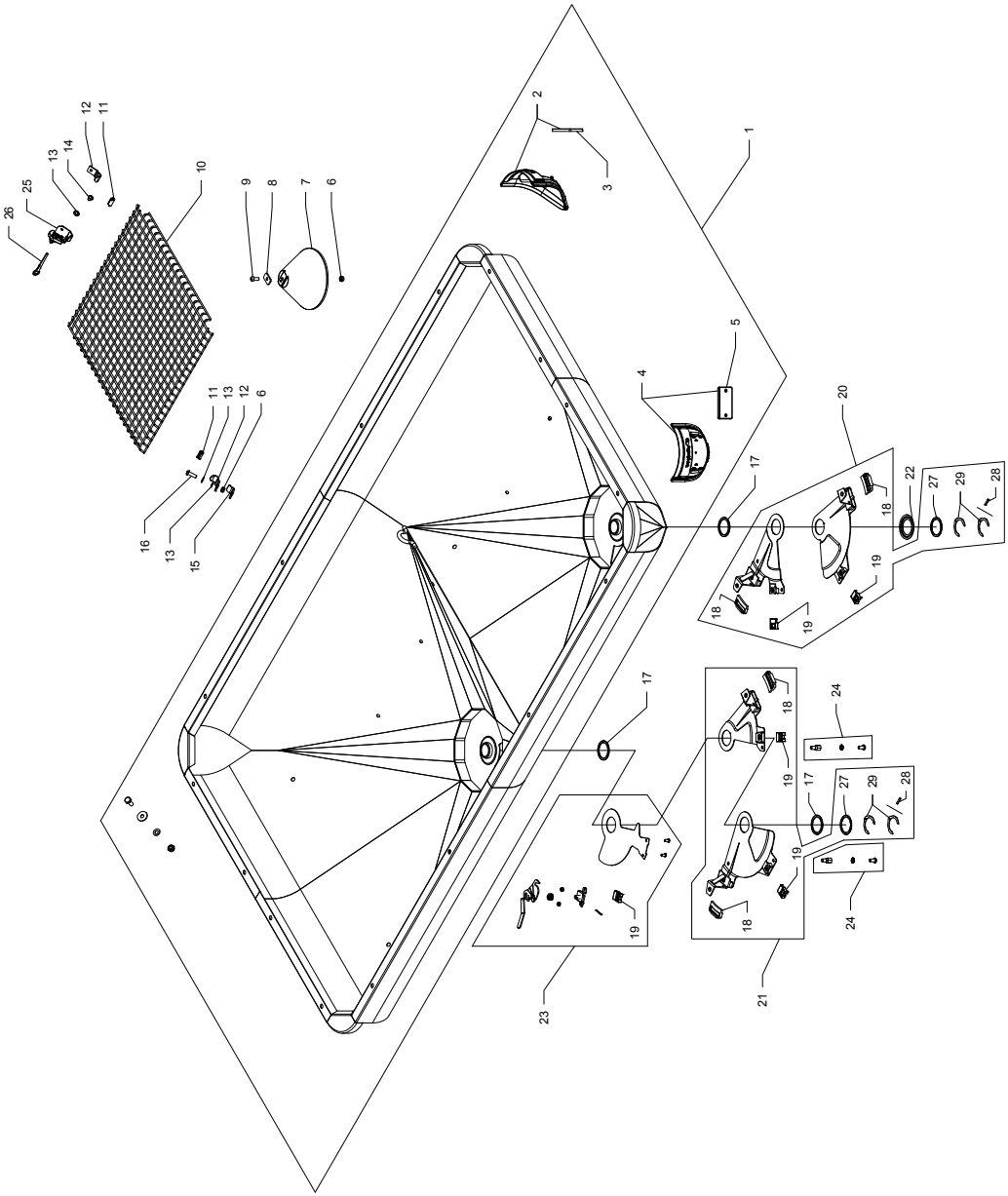
1
2
3
4
5
6
7
8
9
10
11
12
13
14
15
16
17
18
19
20
21
22
23
24
25
26
27
28
29

L2(W)
Spare parts list

Pos. No.	Order no.	Notes.	Pos. No.	Order no.	Notes.
1	6810-04				
2	6311-30				
3	9943-32	Red			
4	6311-31				
5	9943-33	White			
6	9969-32	M8			
7	6716-01				
8	6716-05				
9	9913-50	M8x20			
10	6713-02				
11	6713-10				
12	6313-11				
13	9930-32	D8/16			
14	9962-18	M8x10			
15	6313-12				
16	9962-27	M8x25			
17	4012-11				
18	4412-20	Big			
19	4412-21	Small			
20	6312-03	Left			
21	6312-04	Right			
22	4512-12				
23	6812-01				
24	6312-13				
25	6813-30				
26	6313-27				
27	6312-11	0,8			
28	9933-25	Ø2x10			
29	4511-06				

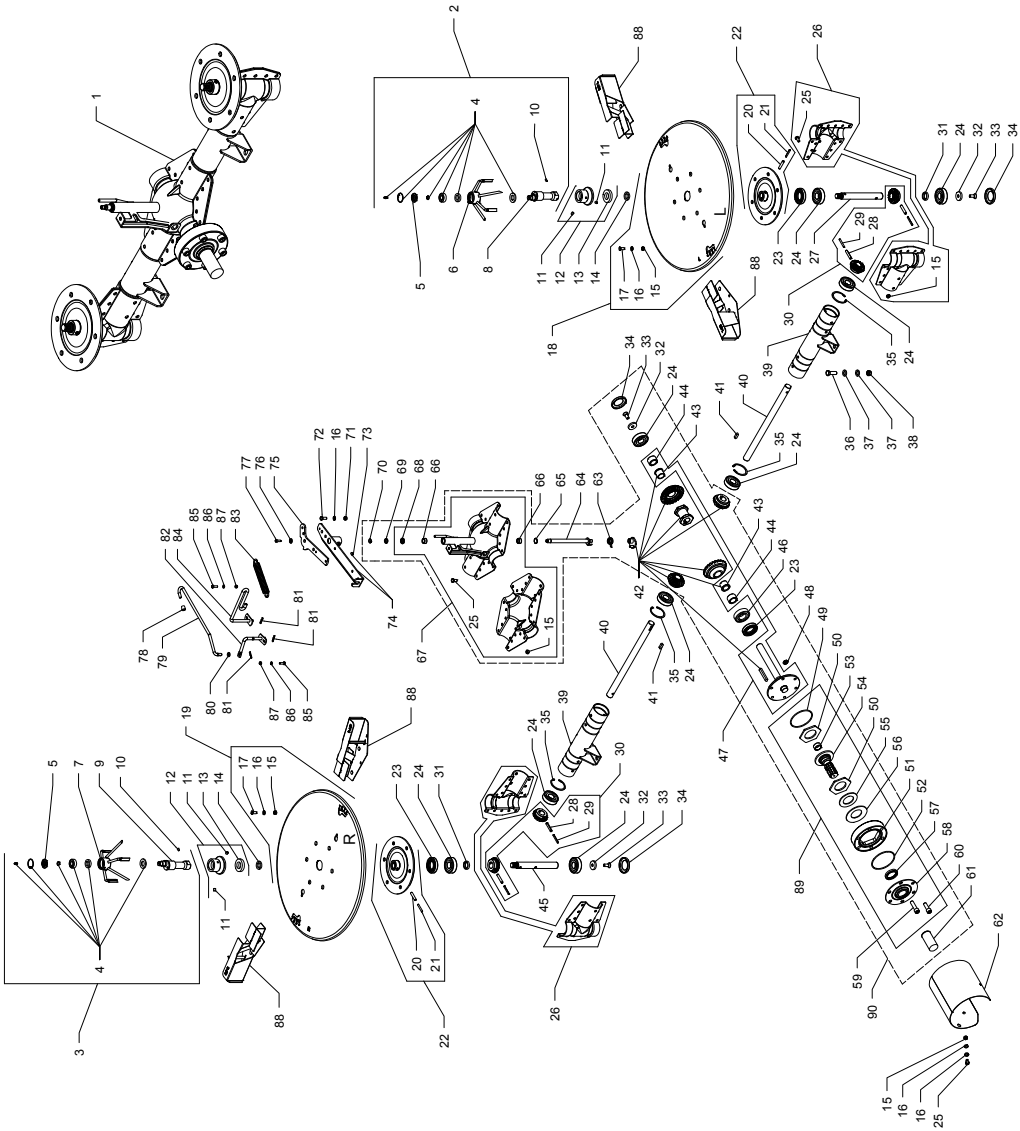

Spare parts list

Pos. No.	Order no.	Notes.	Pos. No.	Order no.	Notes.
1	6850-02	540/750 rpm	48	9928-99	M12
2	4160-01	L-side/R-thread	49	9936-10	ø89,5xø3
3	4160-02	R-side/L-thread	50	3263-15	
4	4056-10		51	3263-20	
5	4056-03		52	9936-09	ø94xø3
6	4058-05	L-side/R	53	9990-90	
7	4058-06	R-side/L	54	3263-11	
8	4161-02	L-side/R-thread	55	3263-12	
9	4161-01	R-side/L-thread	56	9931-10	
10	9961-02	M6x10	57	9936-49	38x52x7
11	9913-19	M8x10	58	3263-13	
12	4158-05		59	9965-10	M12x45
13	4158-10		60	9965-09	M12x35
14	4560-01	ø20xø30x5	61	9985-84	
15	9969-31	M8	62	4470-01	
16	9930-32	D8/16	63	9934-02	
17	9929-35	M8x20	64	4653-02	
18	4550-05	Left	65	9931-15	
19	4550-06	Right	66	9990-99	14x20x10
20	9933-02	ø8x40	67	4660-00	
21	9933-11	ø5x40	68	9936-29	14x22x4
22	4051-05		69	9936-28	
23	9936-37	35x62x12/13	70	9937-13	U 14
24	9950-02	6305-2RS	71	9969-32	M8 Loc
25	9962-03	M8x16	72	9962-04	M8x20
26	4454-05		73	9913-19	M8x10
27	4155-04	Right thread	74	4655-05	
28	9933-12	ø8x45	75	4653-15	
29	9933-17	ø5x45	76	9930-07	D6/17/3
30	3265-02	15 teeth	77	9961-04	M6x16
31	3262-05		78	9990-26	
32	3260-04		79	6850-11	
33	9963-07	M10x25	80	9930-51	D8/16
34	3260-05		81	9934-31	
35	9937-40	I 60	82	6350-08	
36	9965-01	M12x35	83	9934-07	
37	9930-35	D12/24	84	4690-05	
38	9969-62	M12 Loc	85	9961-12	M6x20
39	4457-02		86	9930-02	D6/12
40	4456-02		87	9969-16	M6 Loc
41	9931-56	8x7x25	88	4650-12	E1-T 2 Left / 2 Right
42	4652-11	17/24 teeth	88	4650-20	E2-T 2 Left / 2 Right
43	4652-08		88	4650-28	E6-T 2 Left / 2 Right
44	4652-03		88	4650-50	U1-T 2 Left / 2 Right
45	4062-05	Left thread	89	3263-10	
46	9950-03	6206-2RS	90	4750-50	
47	4652-01				

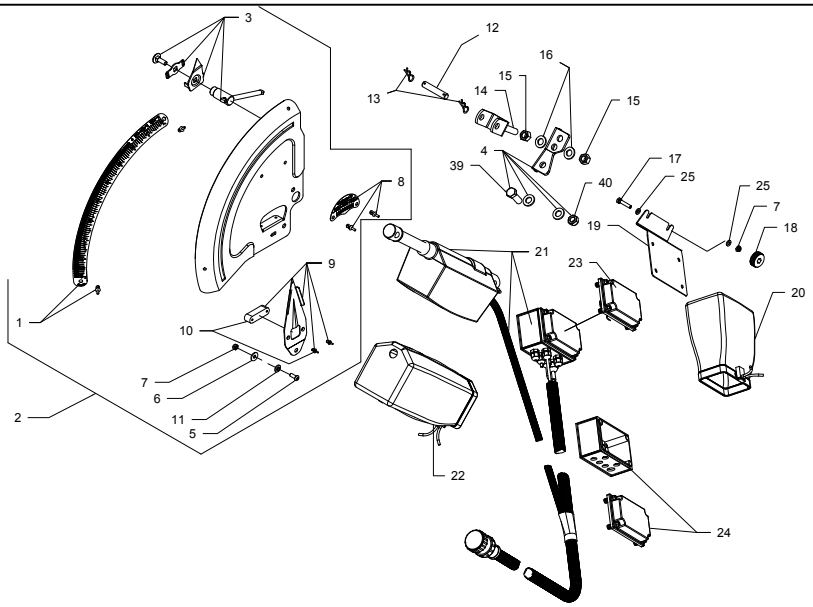
3
12
16
15
14
13
15
4
39
17
25
40
8
25
7
18
19
21
9
23
20
1
10
7
6
2
11
5
22
24

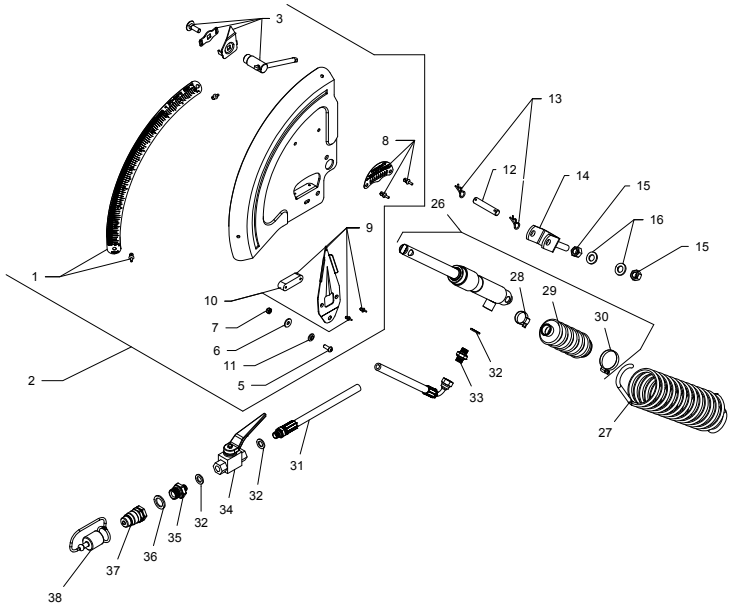
3
13
8
12
14
15
26
16
9
15
1
28
29
10
30
7
6
32
11
2
5
33
27
31
32
34
32
35
36
37
38

Spare parts list

Pos. No.	Order no.	Notes.	Pos. No.	Order no.	Notes.
1	6840-25				
2	6840-20				
3	6381-13				
4	6885-10	L2			
5	9961-21	M6x16			
6	9930-03	D6/18			
7	9969-16	M6 Loc			
8	6381-18				
9	6381-16				
10	6381-17				
11	9930-53	D8/15/3			
12	4581-28				
13	9934-32				
14	4581-25				
15	9969-60	M12			
16	9930-35	D12/24			
17	9961-23	M6x30			
18	9990-43				
19	6384-29				
20	4584-26				
21	6384-28				
22	4584-25				
23	6386-26	L2W			
24	4920-50	L2(W)			
25	9930-02	D6/12			
26	4581-15				
27	9934-14				
28	9990-60	D24			
29	9987-04				
30	9990-61	D40			
31	9983-29				
32	9936-79				
33	9990-78				
34	9982-06				
35	9990-81	Ø0,8			
36	9936-80				
37	9983-09				
38	9990-19				
39	9965-01	M12x35			
40	9969-62	M12 Loc			

Notes: